Method for Detecting Additional Pulses in the Time Response of Structures With Modal Decomposition

Evgeniya Chernikova
Television and Control Department
Tomsk State University of Control
Systems and Radioelectronics
Tomsk, Russian Federation
chiernikova96@mail.com

Anton Belousov
Television and Control Department
Tomsk State University of Control
Systems and Radioelectronics
Tomsk, Russian Federation
ant1lafleur@gmail.com

***Abstract*—The paper presents the method for detecting additional pulses in the time response of structures with modal decomposition. This method was approved in calculating the voltage waveforms at the output of the reflection symmetric meander lines of 2, 3 and 4 cascaded half-turns output signal. In symmetric structures or in structures with optimal cross-sectional parameters, in some cases, it is impossible to observe the presence of additional pulses. However, this is important because the maximum amplitude at the output of the considered structures is determined not only by the main pulses, but also by their superposition with additional pulses. This is a new resource for optimization and, as a result, for improving the characteristics of protective devices based on strip structures.**

***Keywords*—protection devices, reflection symmetry, modal filter, additional pulses, method, time response**

I. INTRODUCTION

Currently, the electromagnetic compatibility (EMC) requirements of radio-electronic equipment (REE) of all kinds and purposes, susceptible to electromagnetic interference and causing it, are getting more and more stringent. This is due to the fact that electronic systems, including microelectronics, information technology equipment, radio communications, etc. are entering all branches of the human and societal life. They, in turn, have an increased susceptibility to electromagnetic interference due to the tendency of reducing the size of microcircuits, increasing data transfer speeds, decreasing power consumption, etc. [1].

One of the tasks of EMC is to protect REE from conducted interference. Its danger is explained by direct penetration into equipment through conductors [2]. A typical example of such excitation is an ultrashort pulse (USP) – a powerful ultra-wideband pulse, which leads to incorrect functioning of the equipment and may be the cause of its failure [3]. It can cause the failure of electrical installations, cables, analog and digital devices and other equipment, since their level of protection against power surges and interference is usually quite low [4]. Taking into account specific features of the time and energy characteristics of USPs of various nature in the current electromagnetic environment, traditional methods of their limiting and filtration are often ineffective and insufficient, which, in turn, requires the use of additional measures to protect REE.

To protect REE against USPs, there has been proposed a modal filtration technology based on the phenomenon of the pulse modal decomposition into pulses of lower amplitude because of the differences in mode delays, while a useful signal propagates in its band without any distortions [5]. Devices based on this technology are called modal filters (MF). They have a number of advantages compared to traditional protection devices: high speed, lack of semiconductor components (varistors, zener diodes), high radiation resistance and, as a result, long service life, high-power operation, small dimensions, simplicity of design and low cost.

There are various configurations of such devices based on strip structures: couple lines, multiconductor lines, lines with interdigitated structure, lines with board-side coupling; lines with edge coupling [6]. Meanwhile, to obtain higher characteristics of such protective devices, it is advisable to optimize them by various methods and according to various criteria. In addition, it is possible to change the configuration of the structure, thereby creating favorable conditions for more efficient decomposition of a USP in an MF. A demonstrative example is the use of structures with symmetry. A new approach to improving modal filtration technology through the use of a reflection symmetric structure has been described in [7]. Its cross section and schematic diagram are presented in Fig. 1.

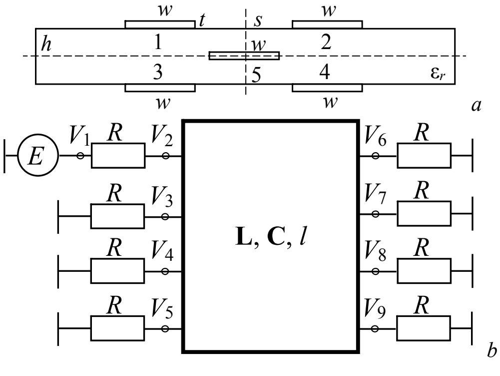

Fig. 1. Cross section and schematic diagram of a reflection symmetric MF

In it, the structural arrangement of the conductors relative to the reference (ground) provides edge and board-side couplings, which allows obtaining pairwise equal voltages of decomposition pulses and close values of the time intervals between them (Fig. 2).

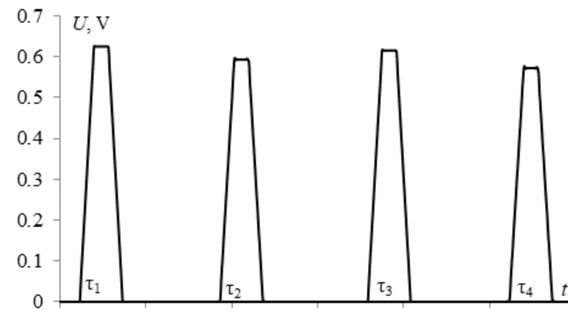

Fig. 2. Output voltage waveform of the reflection symmetric MF

The reported study was funded by Russian Science Foundation (project №19-19-00424).

Well-known is the asymmetric structure of an MF, in which active and passive conductors are asymmetrical to the reference conductor [8]. In the research of this structure without resistors (a short circuit and an open circuit at the ends of the conductors), the authors detected the pulses that were not reflections of signal even and odd modes.

The schematic diagram of the reflection symmetric MF makes it possible to connect half-turns with bridges in the form of a meander line (ML) [9]. In the reflection symmetric MF, resistors are located at all ends of the conductors, which improves the matching of all modes, while the bridges in the reflection symmetric ML provide a decrease in the characteristic impedance for some modes and an increase for others.

The result is a reflection symmetric ML of 2, 3 and 4 cascaded half-turns. When simulating such structures, in the time response, in addition to the main pulses with delays multiple to the per-unit-length mode delays, the researchers also detected the presence the additional pulses with different values of the delays.

However, such pulses may be hidden. Therefore, an urgent task is to develop a method for detecting additional pulses in the time response of structures with modal decomposition. The purpose of the work is to carry out such research.

II. METHOD FOR DETECTING ADDITIONAL PULSES

As noted earlier, the first approaches to detecting additional pulses were made in the research of the asymmetric structure of the MF [8]. Its cross-section is shown in Fig. 3. When simulating the time response of such structure, there were detected the pulses that were not reflections of even and odd modes of a signal. Also, in [8], the features of pulse shapes that differ from trapezoidal ones were noted and it was proved that these pulses arise due to the superposition of the main and additional pulses. To prove this statement, we performed the simulation under the electromotive force (EMF) excitation with the durations of the rise, fall and flat top reduced by 10 times (Fig. 4). This allowed us to separate the overlapped pulses and make a suggestion that there is a regularity in their arrivals. It is shown that they are described by linear combinations of per-unit-length delays of even and odd modes of a line.

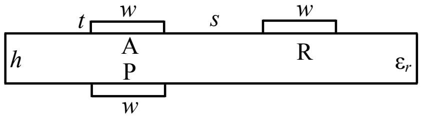

Fig. 3. Cross-section of the asymmetric MF

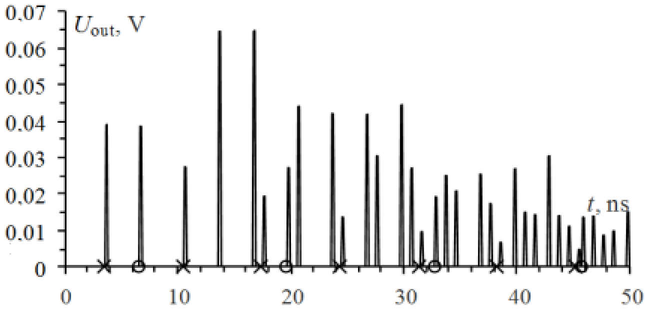

Fig. 4. Waveform at the output of the MF without resistors for an input excitation with duration of rise, fall and flat top of 0.1 ns computed in TALGAT (—); arrival points of even (x) and odd (o) modes [7]

Meanwhile, additional pulses in the time response were detected when simulating reflection symmetric MLs. The diagrams of 2, 3 and 4 cascaded half-turns were investigated. As an example, 3 diagrams of each ML design are shown in Fig. 5. Note that in diagrams 2 and 3, resistors with a nominal resistance of 50 Ω are connected at the ends of the remaining conductors.

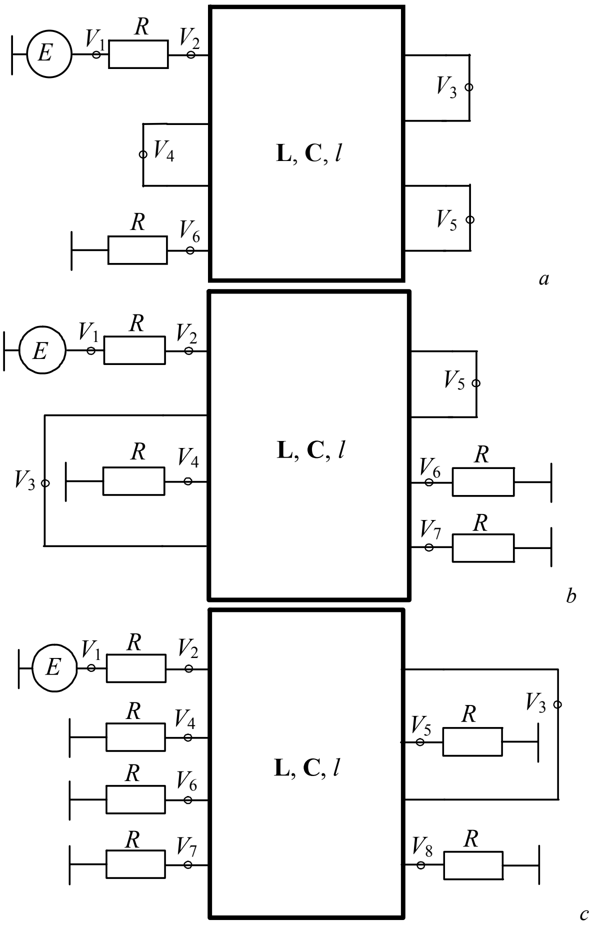

Fig. 5. Schematic diagrams: 1 (of 4 half-turn connection) (*a*), 2 (of 3 half-turn connection) (*b*) and 3 (of 2 half-turn connection) (*c*)

The construction of a cross-section geometric model with optimal values of the parameters (s=510 μm, w=1600 μm, t=18 μm, h=500 μm, ε_r=4,5), the calculation of matrices of per-unit-length coefficients of electrostatic (**C**) and electromagnetic (**L**) inductions, the construction of a diagram for simulation, the assignment of terminations and excitation, as well as the calculation of the time response were made in the TALGAT software [10], chosen for its acceptable accuracy and low computational costs [11]. The length of the ML is 1 m. This value was chosen for the convenience of calculating the per-unit-length mode delays, which at this length are equal to the arrival time of pulses in the time response.

The resulting waveforms of output voltages (nodes: V_6 in Fig. 5 *a*, V_7 in Fig. 5 *b*, V_6 in Fig. 5 *c*) are presented in Fig. 6. In the time response of diagrams 2 and 3, among pulses with delays that are multiple of per-unit-length delays, one can observe additional pulses with time delays which are non-multiple of per-unit-length delays. It can be assumed that such pulses also exist for diagram 1, but in diagrams 2 and 3 the actual number of additional pulses may be more. This is evidenced by several facts, which together allow us to assert the overlapping of several pulses:

1. The increase in the total amplitude of the pulses. For diagram 1 these are pulses of modes 2 and 3 with delays $4\tau_2$ and $4\tau_3$, for diagram 2 – pulses of modes 2 and 3 with delays $3\tau_2$ and $3\tau_3$ and pulses between them, and for diagram 3 – an additional pulse between pulses of modes 2 and 3 with delays $2\tau_2$ and $2\tau_3$.

2. A distorted pulse shape with increased amplitude. A detailed analysis of such pulse waveforms shows that they are different from the trapezoid.

To perform verification of this assumption, let us change the *l* value from 1 to 8 m for all diagrams, inasmuch as from the condition of full pulse decomposition (1), a direct relation of the interval between the decomposition pulses and the line length is obvious.

$$t_{\Sigma} < l \times |\tau_{i+1} - \tau_i|, \ i = 1, ..., N-1, \qquad (1)$$

where t_{Σ} is total duration of a pulse at zero level, *l* is the length of a line, τ_i is per-unit-length delay of the line's *i*-th mode.

An increase in length of 8 times is enough to move apart the overlapped pulses in the time response.

The fragments of the time responses at the output of the diagrams, for *l*=8 m, are presented in Fig. 7.

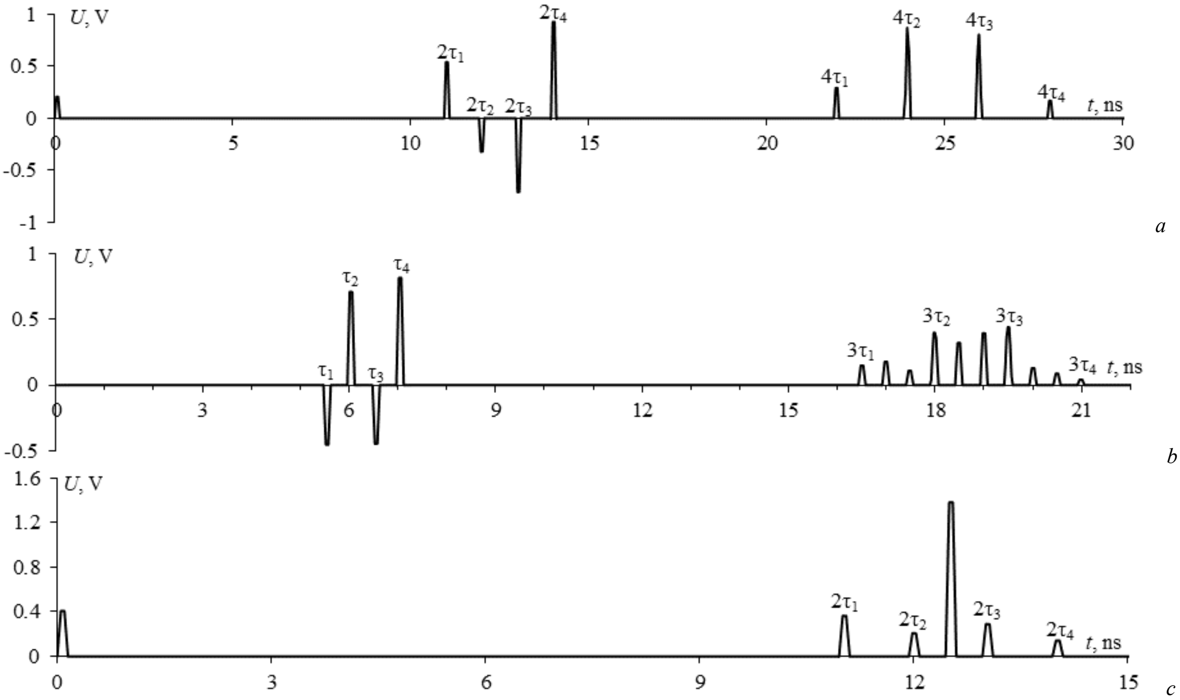

Fig. 6. Voltage waveforms at the output of diagrams 1 (*a*), 2 (*b*) and 3 (*c*)

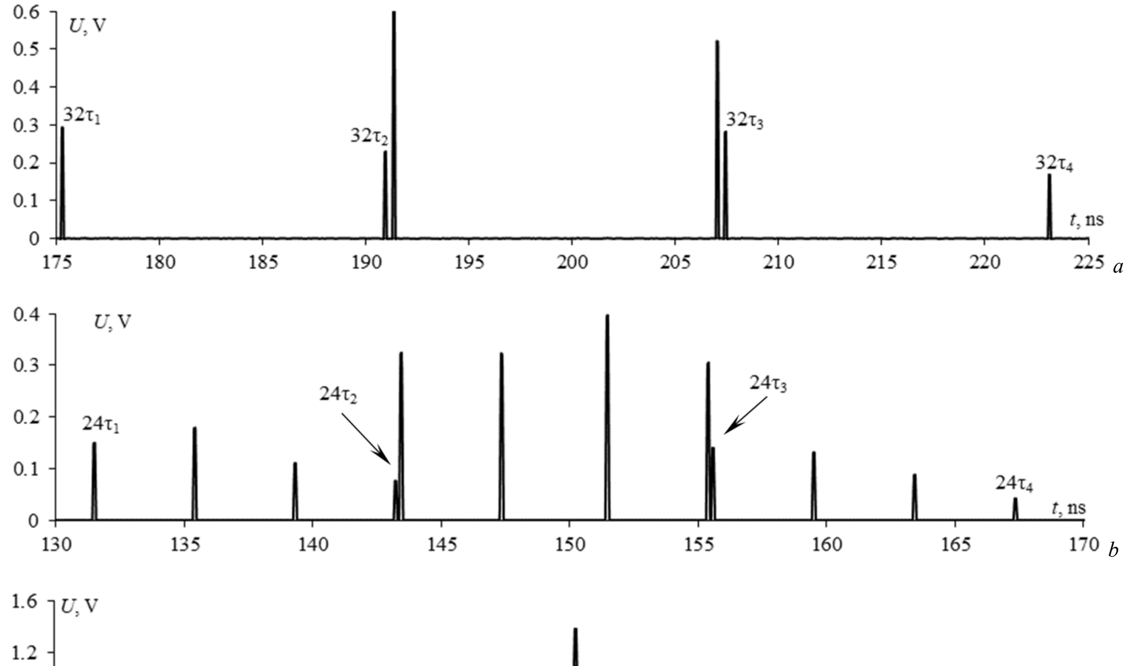

Fig. 7. Voltage waveforms at the output of diagrams 1 (*a*), 2 (*b*) and 3 (*c*) for *l*=8 m

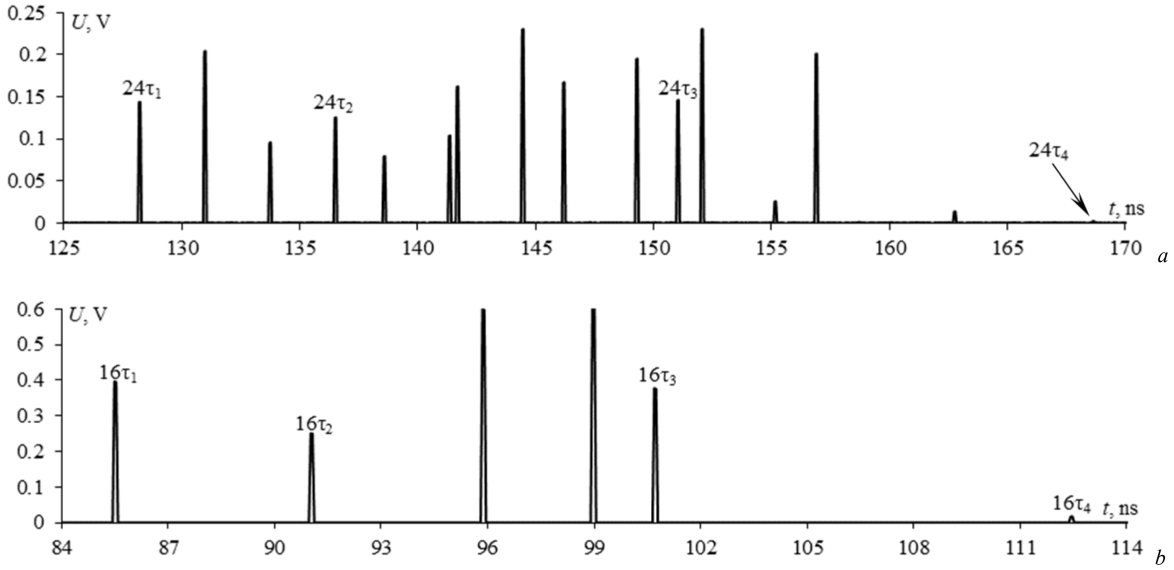

Fig. 8. Voltage waveforms at the output of diagrams 2 (*a*) and 3 (*b*) for *l*=8 m and *h*=1 mm

The simulation results confirm the assumption about the presence of additional pulses in diagram 1 and a bigger quantity of additional pulses in diagram 2 (their values increased from 6 to 8). Whereas for diagram 3, it was not possible to increase the values of time intervals between decomposition pulses to the necessary value by increasing the line length because of the selected parameters of the reflection symmetric MF. Similarly, we also could not achieve the necessary values of the time intervals between the decomposition pulses by increasing the line length for diagram 2. Based on this, for diagrams 2 and 3, to increase the time intervals between decomposition pulses the value of *h* was increased from 0.5 mm to 1 mm. The voltage waveforms at the output of diagrams 2 and 3, where the full decomposition of the pulses is visible, are shown in Fig. 8.

The presence of additional pulses, with time delays non-multiple of per-unit-length time delays, can be seen from Figs. 6–8. For diagrams 1 and 3, the values of the maximum amplitude of the output voltage are determined by the amplitude of the pulse with time delays $2\tau_4$ and τ_4, respectively, and are equal to about 0.9 V. Whereas in diagram 2, this value is determined precisely by the amplitude of the additional pulses and is equal to 0.661 V. It is noteworthy that it is comparable with the maximum amplitude of the reflection symmetric MF (0.625 V). Meanwhile, it can be assumed that when optimizing reflection symmetric MLs according to the criterion for equalizing time intervals between decomposition pulses, including the ones between additional ones, in these diagrams it is possible to increase the attenuation of the USP.

As a result of a stage-by-stage simulation of reflection symmetric MLs, we obtained a general idea of possible conditions for the appearance of additional pulses and, based on this, formulated a method for detecting them. It contains 5 main points that can be supplemented depending on the characteristics of a particular structure under consideration.

1. It is necessary to set a high number of samples per pulse repetition period. Increasing this number will allow for a more correct display of time responses (without taking into account non-physical pulses caused by reflections).
2. It is necessary to evaluate the waveforms of decomposition pulses in detail. The difference between the waveform and the trapezoid can indicate a possible overlapping of several pulses.
3. It is necessary to increase the length of the structure by about 8-10 times. This allows increasing the values of time intervals between decomposition pulses.
4. It is necessary to change the value of the cross-section parameters. Due to the symmetry of some structures, the delays of additional pulses can coincide both with themselves and with the main pulses. Changing the parameters of the cross section will allow, in the general case, changing the coupling between the active and passive conductor(s), which can contribute to an increase in the time intervals between decomposition pulses.
5. It is necessary to reduce the duration of the front, rise and flat top of the excitation during the simulation.

In the case of structures where a change in length, as well as cross-section parameters, does not produce significant changes, it is proposed to reduce the total duration of the excitation in order to localize additional pulses by increasing the values of time intervals between decomposition pulses.

III. CONCLUSION

Thus, for the first time, the method for detecting additional pulses in structures with modal pulse decomposition is presented. It consists of 5 main points.

The urgency for this method is that in symmetric structures or in structures with optimal parameters of the cross-section, in some cases, it is impossible to observe the presence of additional pulses. However, this is important because the maximum amplitude at the output of the considered structures is determined not only by the main pulses, but also by their superposition with additional pulses. This idea is a new resource for optimization and, as a result, for improving the characteristics of such protective devices that can successfully find their application in the tasks of protecting power circuits of critical equipment from USPs.

REFERENCES

[1] W.A. Radasky, C.E. Baum, M.W. Wik "Introduction to the special issue on High-Power Electromagnetics (HPEM) and Intentional Electromagnetic Interference (IEMI)," Special issue of IEEE Transactions on Electromagnetic Comconspatibilit, 2004, vol. 46, no. 3, pp. 314–321.

[2] Z.M. Gizatullin, R.M. Gizatullin "Investigation of the immunity of computer equipment to the power-line electromagnetic interference," Journal of Communications Technology and Electronics, 2016, vol. 61, no. 5, pp. 546–550.

[3] N. Mora, F. Vega, G. Lugrin, F. Rachidi, M. Rubinstein, "Study and classification of potential IEMI sources," System and assessment notes, Note 41, 8 July 2014.

[4] T. Weber, R. Krzikalla, J.L. terHaseborg "Linear and Nonlinear Filters Suppressing UWB Pulses," IEEE Transactions on Electromagnetic Compatibility, 2004, vol. 46, no. 3, pp. 423–430.

[5] A.T. Gazizov, A.M. Zabolotsky, T.R. Gazizov "UWB pulse decomposition in simple printed structures," IEEE Transactions on Electromagnetic Compatibility, 2016, vol. 58, no. 4, pp. 1136–1142.

[6] A.M. Zabolotsky, T.R. Gazizov, "Elektromagnitnaya sovmestimost': modal'nye tekhnologii: uchebnoe posobie," Tomsk: Izdatel'stvo Tomsk. gos. un-ta sistem upr. i radioehlektroniki, 2018, pp. 132 (in Russian).

[7] A.M. Zabolotsky "Application of reflective symmetry for modal filtration improvement," Dokl. Tom. gos. un-ta system upr. i radioelectroniki, 2015, vol. 36, no. 2, pp. 41–44 (in Russian).

[8] A.T. Gazizov, A.M. Zabolotsky, T.T. Gazizov "Time-domain response of asymmetrical modal filter without resistors to ultrashort pulse excitation," 17th International conference on micro/nanotechnologies and electron devices (EDM), June 30 – July 4, 2016, pp. 85–88.

[9] E.B. Chernikova, A.O. Belousov, T.R. Gazizov "Ultrashort pulse decomposition in reflection symmetric meander line of four cascaded half-turns," IOP Conf. Series: Materials Science and Engineering, 2019, vol. 597, no. 012067, pp. 1–6.

[10] S.P. Kuksenko "Preliminary results of TUSUR University project for design of spacecraft power distribution network: EMC simulation," IOP Conf. Series: Materials Science and Engineering, vol. 560, no. 012110, pp. 1–7.

[11] P.E. Orlov, E.N. Buichkin "Quasistatic and electromagnetic simulation of interconnects of printed circuit boards with modal reservation," Proceedings of the 18th International Conference of Young Specialists on Micro/Nanotechnologies and Electron Devices, Erlagol (Altai Republic), Russia, 29 June–3 July 2017, pp. 54–58.